YINGJIAO®

YEL450 SERIES 450W



YEL450 series are designed with lower profile housing ,Adopting the input of 115VAC or 230VAC (select by switch) .

In addition to the high efficiency,Delivering an extremely low no load power consumption. the design of metallic mesh case enhances the heat dissipation.

The good performance can be used for industrial automation & control systems, varied equipments etc.

Features

- AC input range selectable by switch
- Forced air cooling by built-in DC fan
- High operating temperature up to 70 ℃
- Higher Efficiency
- Protection:Short Circuit/Overload/ Over Voltage/Over Temperature
- Three Years Warranty

YINGJIAO®

Model Information

Yingjiao Part Number	DC Voltage	Rated Current	Rated Power	VOLTAGE ADJ.RANGE	Max.Capacitive Load
YEL450-12	12V	37.5A	450W	10.2~13.8V	20000uF
YEL450-15	15V	30A	450W	13.5~18V	10000uF
YEL450-24	24V	18.8A	451.2W	21.6~28.8V	8000uF
YEL450-36	36V	12.5A	450W	32.4~39.6V	6000uF
YEL450-48	48V	9.4A	451.2W	43.2~52.8V	4000uF
YEL450-60	60V	7.5A	450W	54.0~66.0V	1000uF

Input

VOLTAGE RANGE	90~132VAC/180~264VAC by switch	
	240~370VDC (switch on 230VAC)	
FREQUENCY RANGE	47-63Hz	
AVERAGE EFFICIENCY	85.0%	YEL450-12
	86.0%	YEL450-15
	88.0%	YEL450-24
	88.5%	YEL450-36
	89.0%	YEL450-48
	88.5%	YEL450-60
AC CURRENT(Typ.)	10A/115VAC	
	6A/230VAC	
INRUSH CURRENT(Typ.)	35A/115VAC	
	60A/230VAC	
LEAKAGE CURRENT	<2mA/240VAC	

YINGJIAO®

Output

RIPPLE & NOSE(max.)	200mVp-p	YEL450-12
	200mVp-p	YEL450-15
	240mVp-p	YEL450-24
	360mVp-p	YEL450-36
	360mVp-p	YEL450-48
	480mVp-p	YEL450-60
VOLTAGE TOLERANCE	±1.0%	YEL450-12
	±1.0%	YEL450-15
	±1.0%	YEL450-24
	±1.0%	YEL450-36
	±1.0%	YEL450-48
	±1.0%	YEL450-60
LINE REGULATION	±0.5%	
LOAD REGULATION	±1.0%	YEL450-12
	±0.5%	YEL450-15
	±0.5%	YEL450-24
	±0.5%	YEL450-36
	±0.5%	YEL450-48
	±0.5%	YEL450-60
MINIMUM LOAD	0%	
STAND-BY POWER CONSUMPTION	0.75W	
SETUP TIME	1500ms/230VAC at full load	
	1500ms/230VAC at full load	
RISE TIME	50ms/115VAC at full load	
	50ms/115VAC at full load	
HOLD UP TIME (Typ.)	16ms/230VAC at full load	
	12ms/115VAC at full load	

Protection

SHORT CIRCUIT	Protection type: Hiccup mode, recovers automatically
	after fault condition is removed
OVER LOAD	105%-150% Rated Output Power
	Protection type:Rated load, the load can be automatically restored
	after abnormal conditions are removed
OVER VOLTAGE	12V:13.8~16.2V
	15V:18~21V
	24V:27.6~32.4V
	36V:41.4~48.6V
	48V:55.2~64.8V
	60V:69-81V
	recovers automatically after fault condition is removed.
OVER TEMPERATURE	Protection type: Hiccup mode,
	recovers automatically after fault condition is removed.

Environment

WORKING TEMP.	-25 ℃ to +50 ℃ (Refer to "Derating Curve")
Working Humidity	20 ~ 90% RH Non-Condensing
STORAGE TEMP, HUMIDITY	'-40℃ ~+70℃,10 ~ 95% RH non-condensing
TEMP. COEFFICIENT	± 0.03%/℃(0~50℃)
SAFETY PROTECTION	CLASS I
VIBRATION	10~ 500Hz, 5G 10min./1cycle, 60min. each along X, Y,Z axes
OVER VOLTAGE CATEGORY	III; According to BS EN/EN61558, BS EN/EN50178,
	BS EN/EN61000-3-2,-3； BS EN/EN62477-1;
	altitude up to 2000 meters
MTBF	300K hrs min. MIL-HDBK-217F (25℃)

YINGJIAO®

SAFETY & EMC

SAFETY STANDARDS	BS EN/EN62368-1, BS EN/EN61558-1
WITHSTAND VOLTAGE	I/P-O/P:3.75KVAC I/P-FG:2KVAC O/P-FG:0.5KVAC
ISOLATION RESISTANCE	I/P-O/P, I/P-FG, O/P-FG:100M Ohms/ 500VDC/25 °C/70% RH
EMC EMISSION	Compliance to BS EN/EN55032 (CISPR32) Class A,
EMC IMMUNITY	Compliance to BS EN/EN61000-4-2,3,4,5,6,8,perf.CriteriaA
	BS EN/EN61000-4-11,perf.Criteria B

Note

1.All parameters NOT specially mentioned are measured at 115/230vAC input, rated load and 25℃ of ambient temperature

2.Ripple & noise are measured at 20MHz of bandwidth by using a 12" twisted pair-wire terminated with a 0.1uf & 47uf parallel capacitor.

3.Tolerance : includes set up tolerance, line regulation and load regulation.

4.Line regulation is measured from low line to highline at rated load.

5. Load regulation is measured from 0% to 100% rated load.

6.Length of set up time is measured at cold first start. Turning ON/OFF the power supply very quickly may lead to increase of the set up time.

7.The ambient temperature derating of 5℃/1000m is needed for operating altitude greater than 2000m(6500ft).

8.The power supply is considered a component which will be installed into a final equipment.

All the EMC tests are been executed bymounting the unit on a 360mm*360mm metal plate with 1mm of thickness.

The final equipment must be re-confirmed that it still meets EMC directives.

9.The out case needs to be connected to the earth ⏚ ,of system when the terminal equipment in operating.

Dimensions & Weight

Length:	215mm/8.64in
Width:	115mm/4.53in
Height:	30mm/1.18in
Weight:	850g

Packing

Carton Size:	54 × 30 x 24 CM
	21.26 x 11.81 x9.45 in
Master Carton Quantities:	9pcs/Carton

Dimensions and Installation

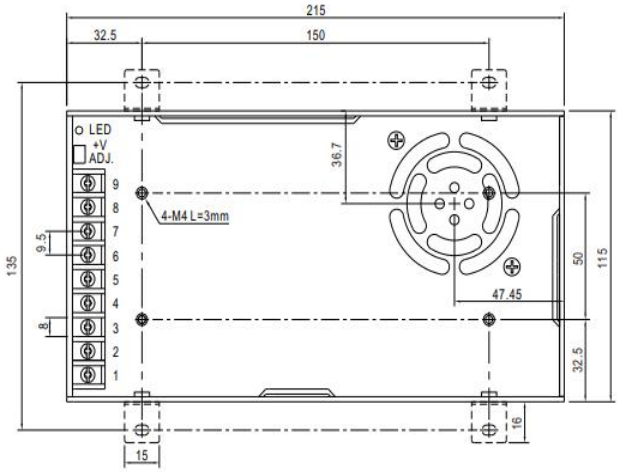

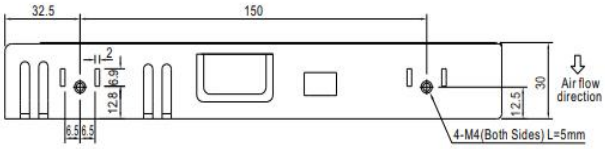

Input

No.	Description
1	AC/L
2	AC/N
3	FG ⏚

Output :

No.	Description
4-6	DC OUTPUT -V
7-9	DC OUTPUT +V

Switch	AC Input	DC Input
115V	90–132VAC	— — —
230V	180–264VAC	240–373VDC

Screw Spec.	L(max)	Torque(max)
M4	5mm	0.9N · m
M4	3mm	0.9N · m

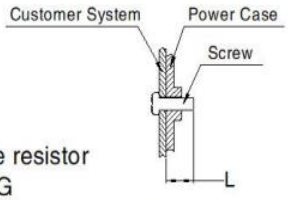

Note:
Unit: mm[inch]
ADJ: Output adjustable resistor
Wire range: 22–12AWG
Connector tightening torque: M3.5, 0.8N · m
General tolerances: ± 1.00[± 0.039]

Block Diagram

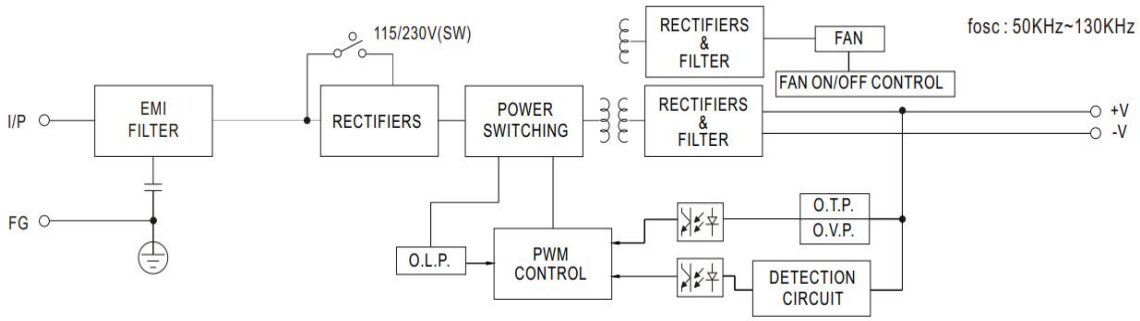

Deduction curve and temperature

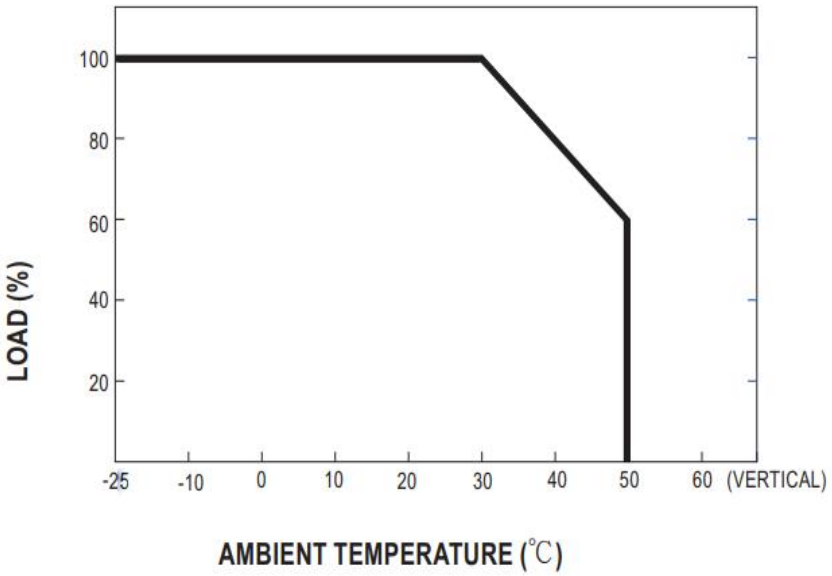

Minus output and input voltage curves

